f) SDA compact cylinder kits

Ordering Code:

SDA - 40

↑ Cylinder type

↑ Bore of cylinder Φ12~100mm

Material list:

Model/ Specification	Part name	Malerial	Part name	Malerial
SDA Kits Bore size: ϕ 12,16,20, 25,32,40, 50,63,80,100	Front cover	Aluminum alloy	Piston seal	NBR
	Back cover	Aluminum alloy	Self lubriacting bearing	PTFE+Brass
	Piston	Aluminum alloy	Magnet(optional)	RbFeb
	Piston rod(Without)	S45C hard chrome carbon steel	C type buckle	Steel
	Barrel(Without)	Hard anodized aluminum	Nut	Carbon steel
	Anti-bump cushion	NBR	Muffler	Cu
	Cover O-ring	NBR		

Internal Structure:

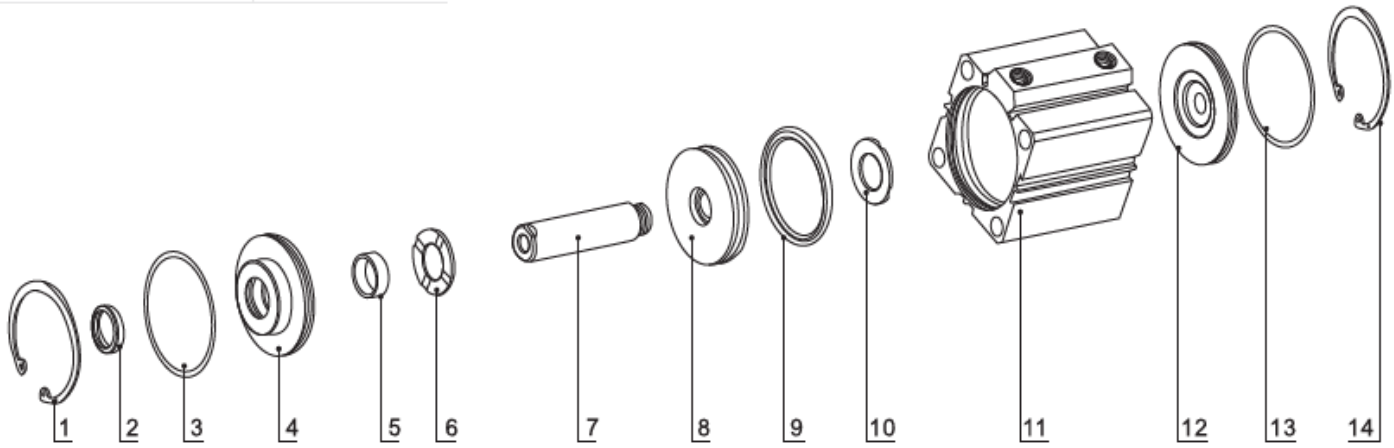

NO	Designation	NO	Designation	NO	Designation	NO	Designation	NO	Designation
1	C type buckle	4	Front cover	7	Piston rod(Without)	10	Anti-bump cushion	13	Cover O-ring
2	Front cover seal	5	Self Lubricating bearing	8	Piston	11	Barrel(Without)	14	C type buckle
3	Cover O-ring	6	Anti-bump cushion	9	Piston Seal	12	Back cover		