d) DSN, MA mini cylinder kits

Ordering Code:

DSN - 25

↑ Cylinder type

↑ Bore of cylinder Φ8~40mm

Material list:

Model/ Specification	Part name	Malerial	Part name	Malerial
MA Kits Bore size: ϕ 16,20,25,32,40 **MA6432 Kits** (ISO6432) Bore size: ϕ 8,10,12, 16,20,25	Front cover	Aluminum alloy	Piston seal	NBR
	Back cover	Aluminum alloy	Wear ring	PA66
	Piston	Aluminum alloy	Self lubriacting bearing	PTFE+Brass
	Piston rod(Without)	S45C hard chrome carbon steel	Magnet(optional)	RbFeb
	Barrel(Without)	Stainless Steel	Cushion needle	Brass
	Front Cover seal	NBR	Hexagon screw	Carbon steel
	Cushion seal	NBR	Nut	Carbon steel
	Pistion rod O-ring	NBR		
	Cover O-ring	NBR		

Internal Structure:

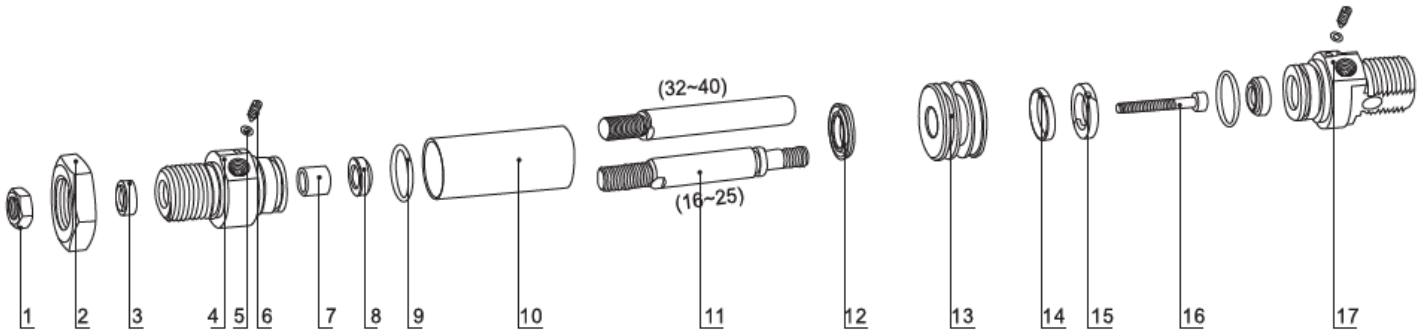

NO	Designation	NO	Designation	NO	Designation	NO	Designation	NO	Designation
1	Rod nut	5	O-ring	9	Cover O-ring	13	Piston	17	Back cover
2	Cover Nut	6	Adjustable screw	10	Barrel(Without)	14	Wear ring		
3	Front Cover seal	7	Self Lubricating bearing	11	Piston rod(Without)	15	Magnet(optional)		
4	Front cover	8	Cushion ring	12	Piston seal	16	Hexagon Screw		